SIREN MOUNTING INSTRUCTIONS

The siren housing, switch-box and strobe lights mount to either side of the handlebar stem. An optional Space-Grip bar mount can be used to mount the siren or lighting. Please view illustrations on reverse side of this page and follow the instructions below:

1. The supplied 1-inch strips of rubber tape attach to the handlebar where the siren, switch-box and lights are to be located. The tape is placed directly under the base mounts of each item. The siren mounting uses two 1-inch strips of tape, for the front & back base-clamp mounts. The switch-box uses two 1-inch strips side-by-side and lighting uses one 1-inch strip for each light.

2. Place the black tie-straps around the handlebar and hands tighten in place, the base mounts should be directly under rubber tape. The siren housing mounts by pushing-on the backside clamp seen in picture below. The tie-straps & siren mounting clamps might require tighten again, do to reforming of the tape over time. The tie-straps & siren backside clamp have a releasable taps, for repositioning.

THE SIREN HOUSING MUST BE MOUNTED WITH ITS EXIT CABLEING POINTED DOWN (TOWARDS THE GROUND).

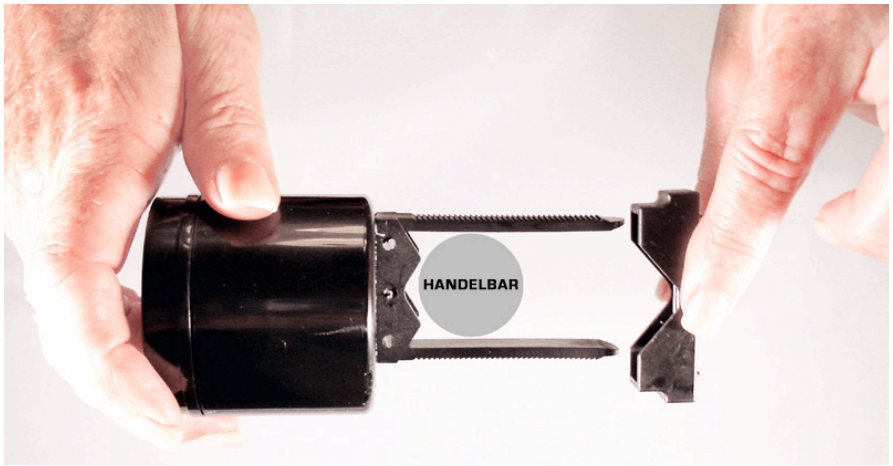

BATTERY INSTALLATION

The 9.6-volt battery pack is placed inside the Police or EMS rear gear pack or rear side packs. The 9.6 volt Ni-MH battery dimensions are (4" x 2.25" x 0.5") and battery weight is 7 oz. **Please see the illustration on reverse side of this page, for details on battery installation.**

USER PROGRAMMING MODES

There are two programming modes available to the User, ***Country Mode*** and ***Horn/Siren Sounds***. Please reference the button switch-box illustration below.

The numbers shown on the tactile buttons are for illustration only

COUNTRY MODE:
Simultaneously hold down buttons 1 & 3 (push button 3 first then 1) and a slow beeping tone will be heard for a few seconds followed by a rapid tone sequence. After the rapid tone sequence, push button 1 or 2 or 3, see button description below – Another rapid tone sequence heard and the siren is now programmed for the new country mode. The following are the operational defaults for each country mode:
Button 1: USA Mode – Wail & Horn sounds and alternating Red/Blue flashing takedown lighting.
Button 2: Cal Mode – Yelp & Horn sounds and Solid Red ON with flashing Blue takedown lighting (referring to the bike front lighting).
Button 3 Euro Mode – Hi-Low & Horn sounds and All Blue flashing takedown lighting.
NOTE:
The audible button click-sound is the default for all country modes. The default sounds for each country mode can be changed, after the country mode has been set.

HORN/SIREN SOUNDS:
WARNING - *Place your hand over front of siren to muffle the sound.*
Simultaneously hold down buttons 2 & 3 (push button 3 first then 2) and a slow beeping tone will be heard for a few seconds followed by a rapid tone sequence. After the rapid tone sequence is heard the siren will rotate through sounds waiting for a sound selection by you. When the desired sound is heard ***Push button 2*** for the new **Horn** sound or ***Push Button 1*** for the new **Siren** sound – A rapid tone sequence is then heard and the siren is now programmed for the new Horn or Siren button sound.

Sound selections for HORN BUTTON: Horn, Whistle and Phaser
Sound selections for SIREN BUTTON: Wail, Yelp and Hi-Low

Repeat the programming mode to select a sound for the other button.

NOTE:
When in the horn/siren programming, if ***Button 3*** is pushed at anytime the audible button click-sound is replaced with the flashing green LED indicator on the control unit and then exit from the programming mode. Repeat programming mode to select a sound for Horn or Siren.

Owner's Manual

CycleSiren Mini-Siren Series

(PROGRAMMABLE)

REVISION: 5.23 DATE: 5/01/2015

WARRANTY

CYCLESIREN warrants the Mini-Siren to the original purchaser to be free of defects in materials or workmanship for a period of one year, of the original date of purchase. Excluding battery pack and battery charger covered by a 90-day warranty. ***CYCLESIREN*** will, at its sole discretion, repair or replace the Mini-Siren deemed defective. Please refer to the ***CYCLESIREN*** web site for product warranty details and to Contact Us.

www.cyclesiren.com

OPERATION

GENERAL OPERATION

Sound Mode On

The front red/blue lighting and optional taillight, automatically turned on with a Siren sound and Horn sound.

LIST OF FUNCTIONS

Sealed Tactile Buttons on the handlebar control unit, access all siren mode functions - shown in picture below.

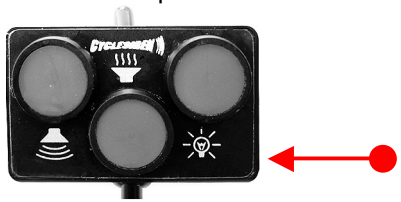

LOW BATTERY/TAILLIGHT-ON INDICATOR

The red/green/amber indicator light located on the handlebar control unit will light **RED** when the battery voltage drops to approximately 7 volts and indicates the battery needs charging. The sound functions will still operate down to 6 volts with reduced audio output. The red/green indicator light will flash **GREEN** at 7-second intervals, when the taillight is ON.

A rapid flashing of GREEN indicator light replaces the audible button click sound, see user programming.

The LED indicator will light **AMBER** when the *Light Button* is kept pushed for 2-seconds to indicate the ***Long Push*** was initiated. See the description of the ***Long Push***.

SIREN PUSH-BUTTON

The 1st momentarily push of the button, the front red/blue lighting turns-ON and no siren sound (if a taillight is installed, the taillight red/blue will also be ON).

A 2nd momentarily push of the button, turns-ON the Wail or Yelp or Hi-Low sound and the front red/blue light and taillight, remain ON (the siren sound heard, depends on User programming mode).

A 3rd momentarily push of button, turns-Off the siren-sound and the front red/blue light and taillight, remain ON.

A 4th momentarily push of the siren button again, repeats the above sequence.

A **LONG PUSH** of the siren button, at anytime, will turn-Off the siren-sound, red/blue front lighting and taillight (the LED on control unit will turn amber). A **Long Push** is 2-seconds or greater.

HORN PUSH-BUTTON

The **Horn** sound remains on as long as the horn button is pushed.

The Horn function button is programmable for other sounds. See the User Programming section.

LIGHT PUSH-BUTTON

With siren sounds and red/blue front lighting, are OFF:

The 1st momentarily push of the button turns-on the taillight, red flashing only.

The 2nd momentarily push of the button turns-on the White streetlight and red flashing taillight.

A **LONG PUSH** of the light button, at anytime, will turn-off the White streetlight and taillight, the LED indicator on control unit will turn amber. A **Long Push** is 2-seconds or greater.

With siren sounds and/or red/blue front lighting, are ON:

A momentarily push of the button will cause **White** streetlight to strobe.

LIST OF ENVIRONMENTAL FACTORS

THE MINI-SIREN IS WATERPROOF FOR LIGHT RAIN CONDITIONS ONLY

- DO NOT TRANSPORT A BIKE EXTERNALLY ON A VEHICLE IF A SIREN IS INSTALLED
- THE SIREN & LIGHT HOUSING MUST BE MOUNTED WITH THE EXIT CABLE POINTED DOWN AT THE GROUND
- DO NOT PRESSURE HOSE WATER CLEAN THE SIREN OR LIGHTING

THE WHITE STREET LIGHT ON THE PATROL SIREN

The Patrol white LED streetlight is designed for in-city use with the aid of city street lighting and should not be used for mountain biking or as the main lighting in very dark areas. The Patrol siren white light is designed the light the road in front of the by bike by 10 to 15 feet by adjusting white light housing up/down.

For Police Bike Officers that require a much brighter front white lighting, CycleSiren recommends using a separate Halogen white light such as the Cateye or CygoLite brand lighting and the CycleSiren Patriot mini-siren.

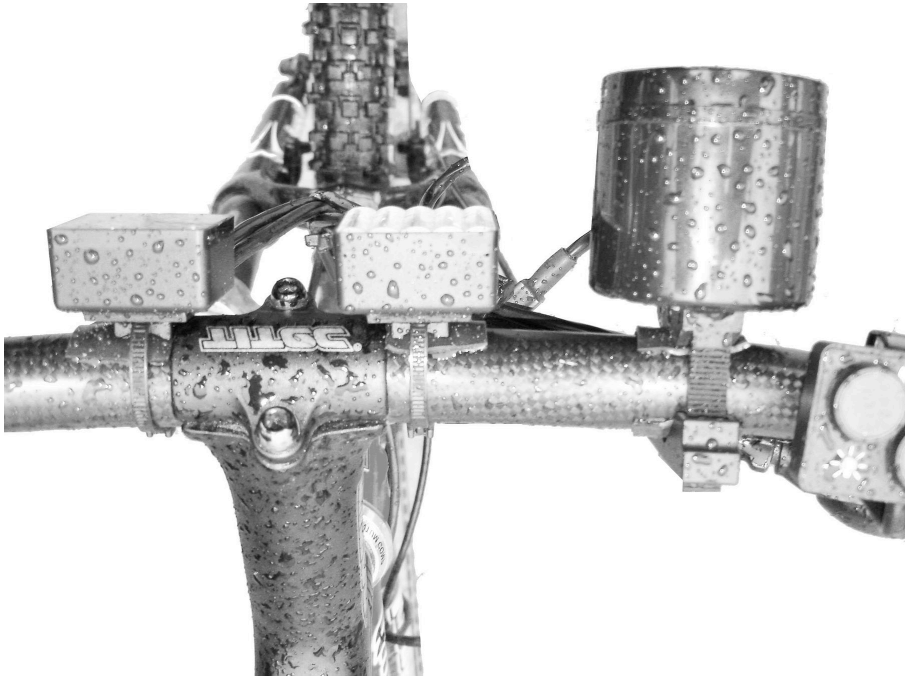

HANDELBAR MOUNTING

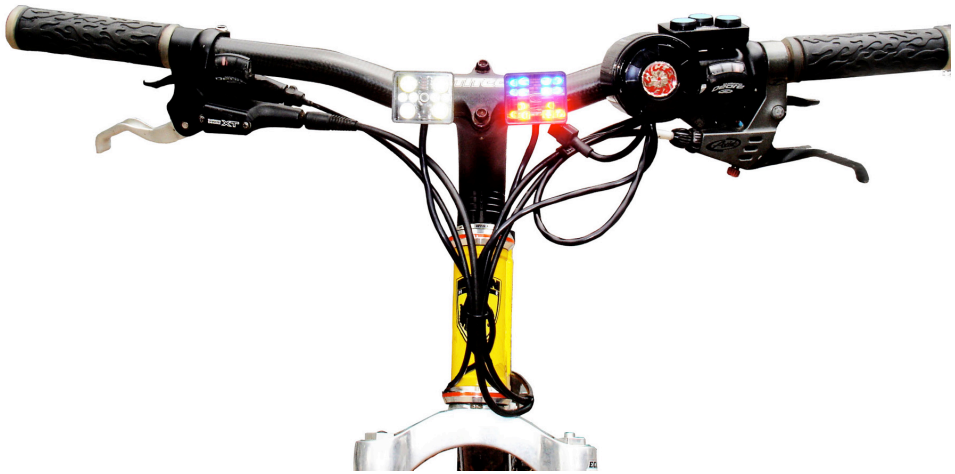

SIDE LIGHTING

9.6 VOLT BATTERY PACK

BATTERY INSTALLATION

The 9.6-volt battery pack is placed inside the Police or EMS rear gear pack or rear side packs. The 9.6 volt Ni-MH battery dimensions are (4" x 2.25" x 0.5") and battery weight is 7 oz.

Run the power cable attached to the siren housing along the top tube of the bike and use the provided Velcro straps to secure the cable to the top tube. Do not secure the siren power cable to a non-enclosed brake or shifter cable. Be sure to make a 6-8 inch loop in the power cable between the siren housing and stem.

The male plug end of the power cable is passed to the inside the gear pack through a zipper entry point in the gear pack. A small hole can also be made in the gear pack, to pass the cable through.

REGARDING BATTERY PACK

If the battery pack is left plugged into the siren for a week or longer, the battery will lose some or all of its charge. The siren's circuitry draws approximately five milliamperes continuously and over a week's time this can drain the battery by 1/3 to 1/2 of the charge of the battery. **Always unplug the battery if the bike and siren, are not being used (bike patrol shift over).**

If the bike siren is in operation every day, recharge the battery every third day. However, if the white front light & taillight are ON for 3 or 4 hours per day, recharge the battery every second day (after your second day shift is over).

It is very important that you charge the battery when the red light (battery low warning) on the siren switch box turns ON and keeps turning ON.
If a battery pack becomes completely discharged, the Smart Charger will sometimes treat the battery as defective and will not charge it. Using the kick-start method a dead battery pack can normally be restored (contact CYCLESIREN for details).

THE BATTERY PACK INTERNAL 2-AMP POLYSWITCH

The battery pack is protected from an electrically short caused by an electrical problem in the siren electronics or external wiring. The battery polyswitch will reset after the electrical short is removed.

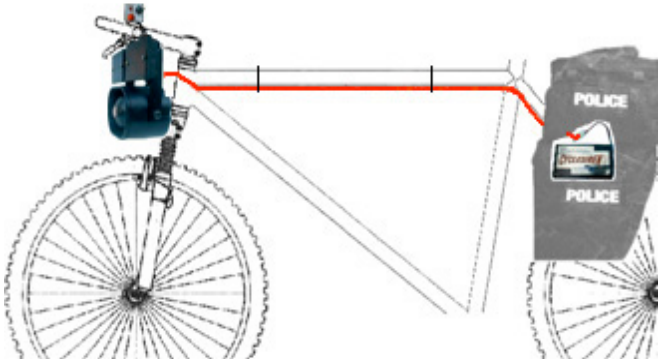

TAILLIGHT INSTALLATION

Use the included taillight bracket mount the taillight on rear end of the metal gear rack. There should be a small hole at gear rack's rear end for mounting a light reflector. A second option, the taillight bracket can be removed and the taillight can be mounted directly to the bike frame and secured with a small cable tie.

1. The black taillight connector plugs into the mating black connector located on the siren's power cable assembly (directly behind the white battery connector).
2. The excess taillight cabling is secured with cable ties under the rear gear bag.

SIDE-LIGHT INSTALLATION

The side-lights are mounted on the rear gear metal carrier in either a vertical or horizontal position.

1. Mount the taillight first.
2. Mount the left & right side light using four 5-inch black cable ties per light, in either a vertical or horizontal position on the gear carrier, refer to the picture example. Do not over tighten the cable ties.
3. The excess light assembly cabling is secured with cable ties under the rear gear bag.
4. If connectors are installed on the side-light cable, plug the side-light cable in series with the taillight and power plug cable assembly.
5. To disable the RED LED's, cut the wire loop located at center of harness.

LIMITS OF LIABILITY

Neither party shall be liable to the other party for payment, repayment, or damages relating to profits, whether present or future expenses, investments or commitments, or for any reason whatsoever. With respect to any order of products or the performance of any order of the products themselves, CYCLESIREN liability for negligence or otherwise, will not exceed the purchase price of the items contained in that order. In no event shall CYCLESIREN be liable to the purchaser for special, incidental, or consequential damages. CYCLESIREN is the trade name of CYCLE SIREN, INC.